UNIVERSITY OF CAMBRIDGE INTERNATIONAL EXAMINATIONS
International General Certificate of Secondary Education

CANDIDATE NAME	

CENTRE NUMBER						CANDIDATE NUMBER				

* 2 9 7 3 9 0 7 8 2 9 *

CHEMISTRY **0620/02**

Paper 2 **October/November 2009**

1 hour 15 minutes

Candidates answer on the Question Paper.

No Additional Materials are required.

READ THESE INSTRUCTIONS FIRST

Write your Centre number, candidate number and name in the spaces at the top of this page.
Write in dark blue or black pen.
You may need to use a pencil for any diagrams, graphs or rough working.
Do not use staples, paper clips, highlighters, glue or correction fluid.
DO **NOT** WRITE IN ANY BARCODES.

Answer **all** questions.
A copy of the periodic table is printed on page 20.

At the end of the examination, fasten all your work securely together.

The number of marks is given in brackets [ ] at the end of each question or part question.

For Examiner's Use	
1	
2	
3	
4	
5	
6	
7	
Total	

This document consists of **17** printed pages and **3** blank pages.

© UCLES 2009

UNIVERSITY of CAMBRIDGE International Examinations

www.root19.com +91 - 9969 353 391

For Examiner's Use

1 The list shows some non-metallic elements.

bromine
carbon
fluorine
krypton
nitrogen
oxygen

(a) Which **two** elements in the list are in the same Group of the Periodic Table?

..... and ..... [1]

(b) Which element in the list has the highest proton number?

..... [1]

(c) Which **two** of these elements make up most of the air?

..... and ..... [1]

(d) Bromine and fluorine form a compound with the formula BrF_5.
Calculate the relative molecular mass of BrF_5.

[1]

(e) The diagram shows the structure of some compounds containing oxygen.

A

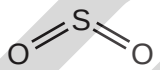

B

C

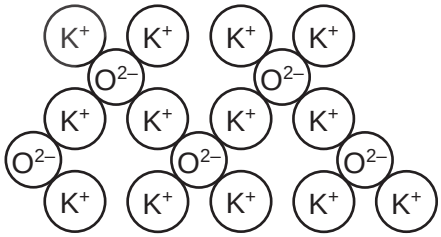

D

(i) What type of oxide is compound **C**?

..... [1]

© UCLES 2009
www.root19.com

+91 - 9969 353 391

For Examiner's Use

(ii) Compound **A** is an atmospheric pollutant.
Describe the source of compound **A** and state its effect on the environment.

Source .....

Effect on the environment .....

..... [2]

(iii) In the presence of air, compound **D** reacts with water to form nitric acid.

A student used the apparatus below to add an aqueous solution of nitric acid to an aqueous solution of potassium hydroxide. He added the acid until it was in excess.

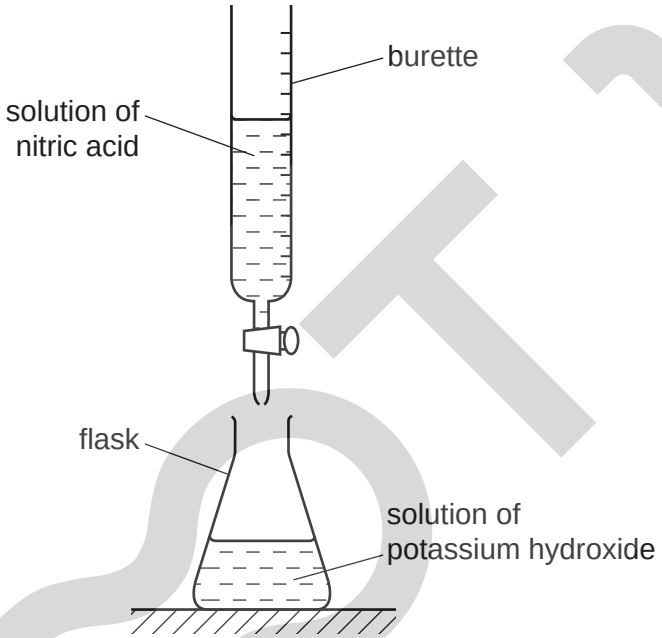

Describe how the pH of the solution in the flask changes as the nitric acid is added until the acid is in excess.

.....

.....

..... [3]

(iv) Describe how you can measure this pH change.

..... [1]

(v) The equation for the reaction is

$KOH + HNO_3 \rightarrow KNO_3 + H_2O$

State the name of the salt formed in this reaction.

..... [1]

[Total: 12]

© UCLES 2009
www.root19.com

+91 - 9969 353 591

For Examiner's Use

2 **(a)** Link the terms in the boxes on the left with the definitions on the right.
The first one has been done for you.

atom	a substance containing different atoms or ions bonded together
compound	a substance made up of one type of atom
element	the smallest part of an element which takes part in a chemical reaction
ion	the smallest group of covalently bonded atoms which can exist on its own
molecule	a charged atom or group of atoms

[4]

(b) Which **two** of the following are mixtures?
Tick two boxes.

air ☐

graphite ☐

sodium chloride ☐

steel ☐

[1]

© UCLES 2009
www.root19.com

+91 - 9969 353 391

For Examiner's Use

(c) **(i)** Draw a labelled diagram to show the atomic structure of an atom of helium.
In your diagram include the structure of the nucleus.

[4]

(ii) State a use for helium.

..... [1]

(iii) Which one of these statements about helium is correct?

helium is in Period 2 of the Periodic Table ☐

helium is a liquid at room temperature ☐

helium is unreactive ☐

helium has an incomplete outer shell of electrons ☐

[1]

[Total: 11]

© UCLES 2009
www.root19.com

+91 - 9969 353 591

For Examiner's Use

3 A student used the apparatus shown to calculate the energy released when ethanol burns.

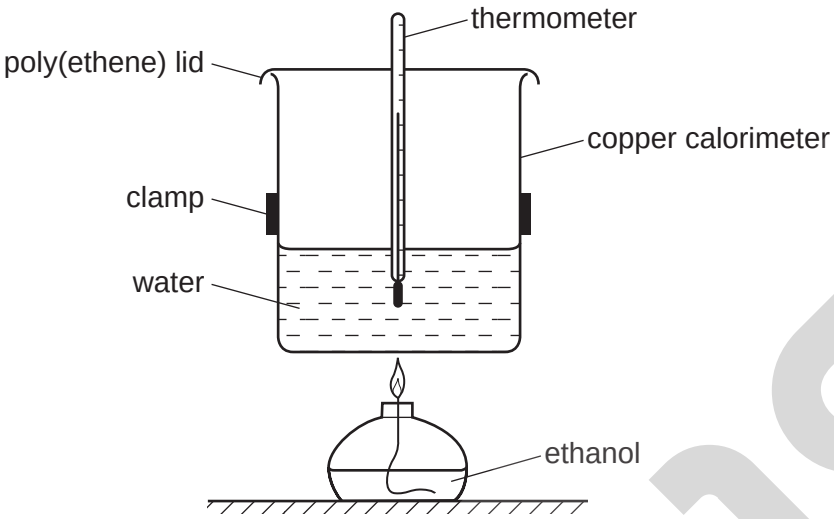

(a) Draw the structure of ethanol showing all atoms and bonds.

[1]

(b) The energy released by the burning ethanol raises the temperature of the water in the copper calorimeter.

(i) Which one of these words best describes the energy change when ethanol burns? Put a ring around the correct answer.

electrolytic **electronic** **endothermic** **exothermic**

[1]

(ii) When 4.6 g of ethanol is burnt, 5.4 g of water is formed.
Calculate the mass of water formed when 13.8 g of ethanol is burnt.

[1]

© UCLES 2009
www.root19.com

+91 - 9969 353 391

For Examiner's Use

(iii) Complete the equation for the combustion of ethanol.

C_2H_5OH + $3O_2$ → ..... CO_2 + ... H_2O [1]

(c) The calorimeter is made of copper. Copper is a transition metal.
State two properties which distinguish transition metals from Group I metals.

.....

..... [2]

(d) When copper is left exposed to the air for some time, a coating of copper carbonate forms on its surface. The equation shows how copper carbonate reacts with hydrochloric acid.

$$CuCO_3(s) + 2HCl(aq) \rightarrow CuCl_2(aq) + CO_2(g) + H_2O(l)$$

(i) Describe two observations that can be made as this reaction happens.

1. .....

2. ..... [2]

(ii) State the meaning of the symbol (aq).

..... [1]

(e) The calorimeter lid is made of poly(ethene).
Complete these sentences about poly(ethene) using words from the list.

acids **addition** **condensation** **ethane** **ethene** **monomers** **polymer**

Poly(ethene) is a ..... formed by the ..... of ethene molecules.

In this reaction the ethene molecules can be described as .....

[3]

[Total: 12]

© UCLES 2009
www.root19.com

+91 - 9969 353 591

For Examiner's Use

4 Caesium is a metal in Group I of the Periodic Table.

(a) State two physical properties of caesium.

.....

..... [2]

(b) State the number of electrons in the outer shell of a caesium atom.

..... [1]

(c) An isotope of caesium has a mass number of 133.

(i) What do you understand by the term *isotope*?

..... [1]

(ii) Calculate the number of neutrons in this isotope of caesium.

..... [1]

(d) Complete the following table to estimate the boiling point of caesium and predict the reactivity of caesium with water.

Group I metal	density / g/cm^3	boiling point / °C	reactivity with water
sodium	0.97	883	fizzes quickly, disappears gradually and does not burst into flame
potassium	0.86	760	fizzes very quickly, disappears quickly and bursts into flame with a little spitting
rubidium	1.53	686	fizzes extremely quickly, bursts into flame then spits violently and may explode
caesium	1.88		

[2]

© UCLES 2009
www.root19.com

+91 - 9969 353 391

For Examiner's Use

(e) The diagram shows the structure of caesium chloride.

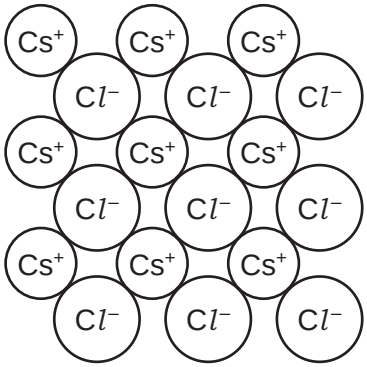

Use this diagram to work out the simplest formula for caesium chloride.

..... [1]

(f) Caesium chloride dissolves in water to form a neutral solution.
State the pH of a neutral solution.

..... [1]

(g) Describe a test for chloride ions.

test .....

result .....

..... [2]

[Total: 11]

© UCLES 2009
www.root19.com

+91 - 9969 353 591

For Examiner's Use

5 Limonene is a colourless unsaturated hydrocarbon found in lemons.
The structure of limonene is shown below.

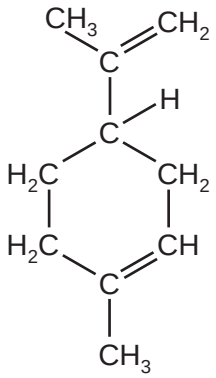

(a) On the formula above, draw a circle around the bonds which make limonene an unsaturated compound. [1]

(b) Write the molecular formula for a molecule of limonene.

..... [1]

(c) Describe the colour change which occurs when excess limonene is added to a few drops of bromine water.

..... [2]

© UCLES 2009
www.root19.com

+91 - 9969 353 391

For Examiner's Use

(d) Limonene can be extracted from lemon peel by steam distillation.

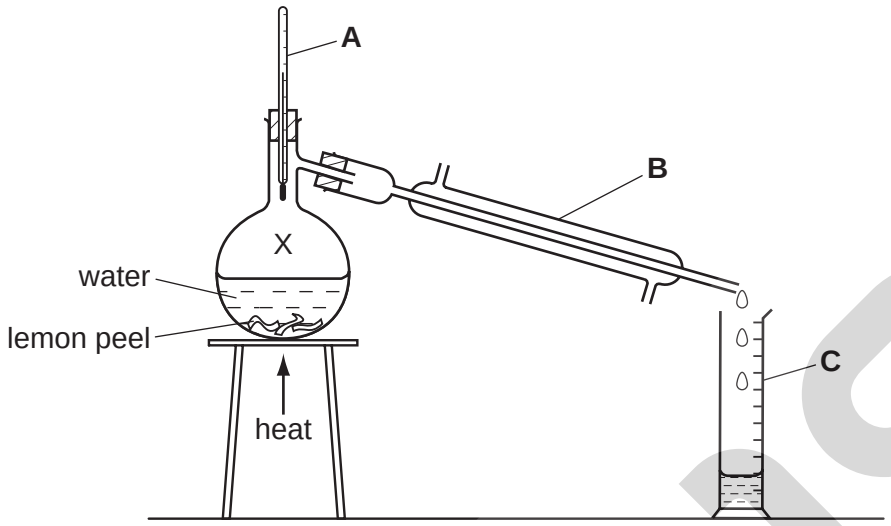

(i) State the name of the pieces of apparatus labelled **A**, **B** and **C**.

A .....

B .....

C ..... [3]

(ii) At point X on the diagram, the water is in the form of steam.
Describe the arrangement and the movement of the particles in steam.

arrangement .....

movement ..... [2]

(e) When limonene undergoes incomplete combustion, carbon monoxide is formed.

(i) What do you understand by the term *incomplete combustion*?

..... [1]

(ii) State an adverse effect of carbon monoxide on health.

..... [1]

© UCLES 2009
www.root19.com

+91 - 9969 353 591

For Examiner's Use

(f) The structures of some compounds found in plants are shown below.

A

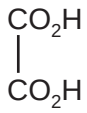

B

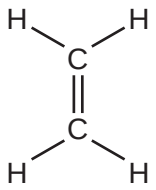

C

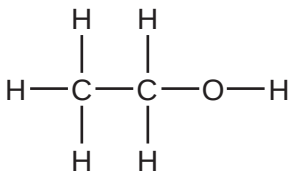

D

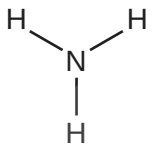

(i) Which one of these compounds is a carboxylic acid? ..... [1]

(ii) Which one of these compounds is produced by the fermentation of glucose?

..... [1]

(iii) Which one of these compounds is a hydrocarbon? ..... [1]

[Total: 14]

© UCLES 2009
www.root19.com

+91 - 9969 353 391

For Examiner's Use

6 Aluminium is extracted by the electrolysis of aluminium oxide.

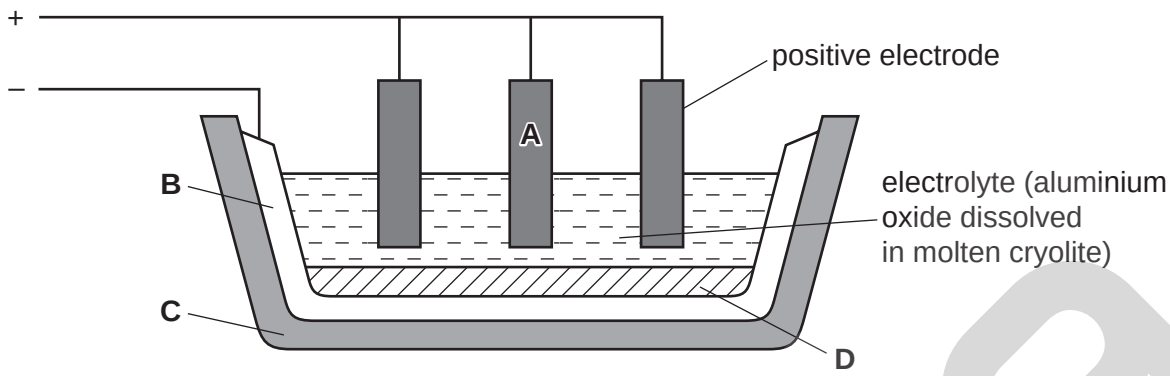

(a) Hydrated aluminium oxide is heated to produce pure aluminium oxide.

$$\underset{\text{hydrated aluminium oxide}}{Al_2O_3.3H_2O} \rightarrow Al_2O_3 + 3H_2O$$

What type of reaction is this?
Put a ring around the correct answer.

decompositon **neutralisation** **oxidation** **reduction**

[1]

(b) Explain why the electrolyte must be molten for electrolysis to occur.

..... [1]

(c) What is the purpose of the cryolite?

..... [1]

(d) Which letter in the diagram, **A**, **B**, **C** or **D**, represents the cathode?

..... [1]

(e) State the name of the products formed at the anode and cathode during this electrolysis.

anode .....

cathode ..... [2]

(f) Why do the anodes have to be renewed periodically?

.....

..... [2]

© UCLES 2009
www.root19.com

+91 - 9969 353 591

For Examiner's Use

(g) Complete the equation for the formation of aluminium from aluminium ions.

$$Al^{3+} + \ldots\ldots e^{-} \rightarrow Al$$ [1]

(h) State one use of aluminium.

..... [1]

[Total: 10]

© UCLES 2009
www.root19.com

+91 - 9969 353 391

For Examiner's Use

7 The diagram shows an experiment to investigate the rusting of some iron nails.

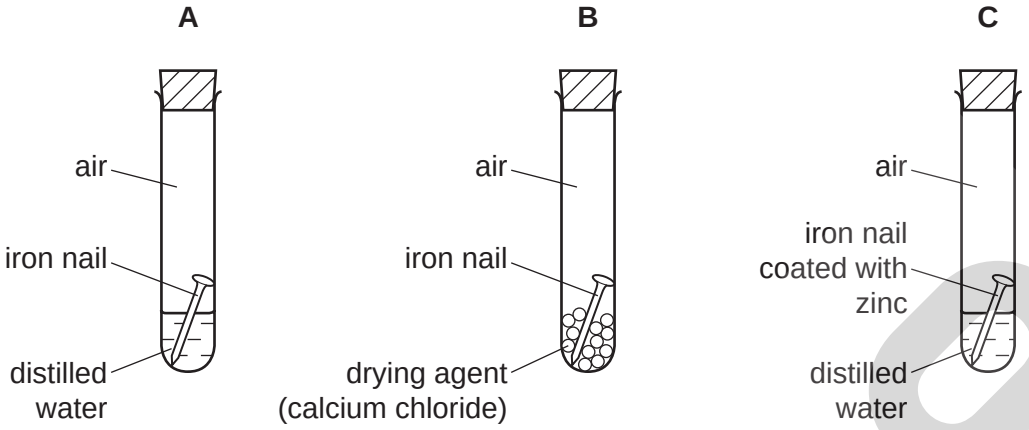

(a) For each tube **A**, **B** and **C** predict whether the nails will rust. In each case give a reason.

tube **A**: does the nail rust? .....

reason .....

tube **B**: does the nail rust? .....

reason .....

tube **C**: does the nail rust? .....

reason .....

[3]

(b) Iron from the blast furnace contains impurities such as carbon, phosphorus, silicon and sulfur.
Describe how the level of these impurities is decreased when steel is made from impure iron.

.....

.....

.....

..... [3]

(c) State a use for stainless steel.

..... [1]

© UCLES 2009
www.root19.com

+91 - 9969 353 591

For Examiner's Use

(d) Pure iron can be prepared by the reduction of iron(II) oxide, FeO.

$$FeO + H_2 \rightarrow Fe + H_2O$$

Explain how this equation shows that the iron(II) oxide has been reduced.

.....

..... [1]

(e) Iron(II) oxide reacts with acids.

$$FeO + 2HCl \rightarrow FeCl_2 + H_2O$$

Write a word equation for this reaction.

..... [2]

[Total: 10]

© UCLES 2009
www.root19.com

+91 - 9969 353 391

BLANK PAGE

root 19

BLANK PAGE

root 19

BLANK PAGE

root 19

DATA SHEET
The Periodic Table of the Elements

Group I	Group II											Group III	Group IV	Group V	Group VI	Group VII	Group 0
							1 **H** Hydrogen 1										4 **He** Helium 2
7 **Li** Lithium 3	9 **Be** Beryllium 4											11 **B** Boron 5	12 **C** Carbon 6	14 **N** Nitrogen 7	16 **O** Oxygen 8	19 **F** Fluorine 9	20 **Ne** Neon 10
23 **Na** Sodium 11	24 **Mg** Magnesium 12											27 **Al** Aluminium 13	28 **Si** Silicon 14	31 **P** Phosphorus 15	32 **S** Sulfur 16	35.5 **Cl** Chlorine 17	40 **Ar** Argon 18
39 **K** Potassium 19	40 **Ca** Calcium 20	45 **Sc** Scandium 21	48 **Ti** Titanium 22	51 **V** Vanadium 23	52 **Cr** Chromium 24	55 **Mn** Manganese 25	56 **Fe** Iron 26	59 **Co** Cobalt 27	59 **Ni** Nickel 28	64 **Cu** Copper 29	65 **Zn** Zinc 30	70 **Ga** Gallium 31	73 **Ge** Germanium 32	75 **As** Arsenic 33	79 **Se** Selenium 34	80 **Br** Bromine 35	84 **Kr** Krypton 36
85 **Rb** Rubidium 37	88 **Sr** Strontium 38	89 **Y** Yttrium 39	91 **Zr** Zirconium 40	93 **Nb** Niobium 41	96 **Mo** Molybdenum 42	**Tc** Technetium 43	101 **Ru** Ruthenium 44	103 **Rh** Rhodium 45	106 **Pd** Palladium 46	108 **Ag** Silver 47	112 **Cd** Cadmium 48	115 **In** Indium 49	119 **Sn** Tin 50	122 **Sb** Antimony 51	128 **Te** Tellurium 52	127 **I** Iodine 53	131 **Xe** Xenon 54
133 **Cs** Caesium 55	137 **Ba** Barium 56	139 **La** Lanthanum 57 *	178 **Hf** Hafnium 72	181 **Ta** Tantalum 73	184 **W** Tungsten 74	186 **Re** Rhenium 75	190 **Os** Osmium 76	192 **Ir** Iridium 77	195 **Pt** Platinum 78	197 **Au** Gold 79	201 **Hg** Mercury 80	204 **Tl** Thallium 81	207 **Pb** Lead 82	209 **Bi** Bismuth 83	**Po** Polonium 84	**At** Astatine 85	**Rn** Radon 86
Fr Francium 87	226 **Ra** Radium 88	227 **Ac** Actinium 89 †															

140 **Ce** Cerium 58	141 **Pr** Praseodymium 59	144 **Nd** Neodymium 60	**Pm** Promethium 61	150 **Sm** Samarium 62	152 **Eu** Europium 63	157 **Gd** Gadolinium 64	159 **Tb** Terbium 65	162 **Dy** Dysprosium 66	165 **Ho** Holmium 67	167 **Er** Erbium 68	169 **Tm** Thulium 69	173 **Yb** Ytterbium 70	175 **Lu** Lutetium 71
232 **Th** Thorium 90	**Pa** Protactinium 91	238 **U** Uranium 92	**Np** Neptunium 93	**Pu** Plutonium 94	**Am** Americium 95	**Cm** Curium 96	**Bk** Berkelium 97	**Cf** Californium 98	**Es** Einsteinium 99	**Fm** Fermium 100	**Md** Mendelevium 101	**No** Nobelium 102	**Lr** Lawrencium 103

*58-71 Lanthanoid series
†90-103 Actinoid series

Key

a	
X	a = relative atomic mass
b	**X** = atomic symbol
	b = proton (atomic) number

The volume of one mole of any gas is 24 dm^3 at room temperature and pressure (r.t.p.).

Permission to reproduce items where third-party owned material protected by copyright is included has been sought and cleared where possible. Every reasonable effort has been made by the publisher (UCLES) to trace copyright holders, but if any items requiring clearance have unwittingly been included, the publisher will be pleased to make amends at the earliest possible opportunity.

University of Cambridge International Examinations is part of the Cambridge Assessment Group. Cambridge Assessment is the brand name of University of Cambridge Local Examinations Syndicate (UCLES), which is itself a department of the University of Cambridge.